Paradise City

Ukulele Version

www.markrandlesome.co.uk

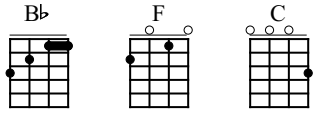

C Tuning
①= A ③= C
②= E ④= G

♩ = 104

Intro

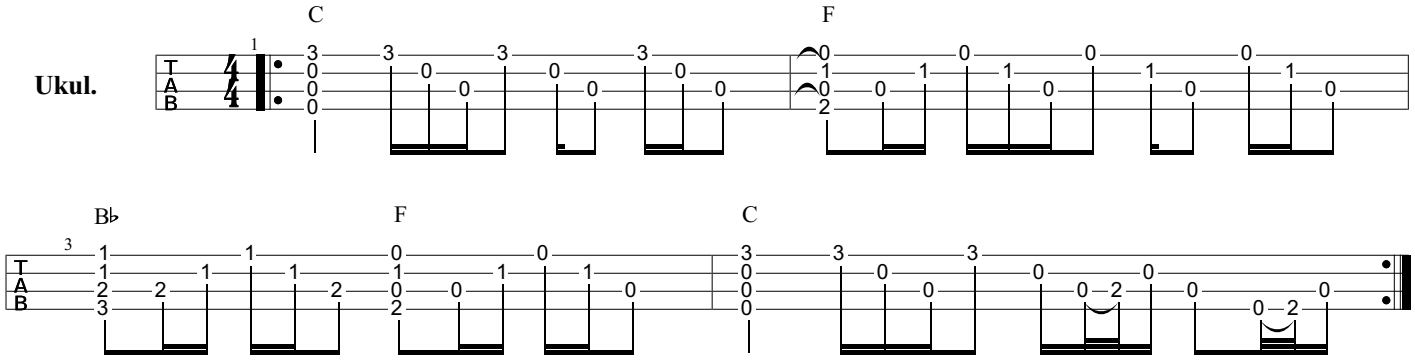

Chorus

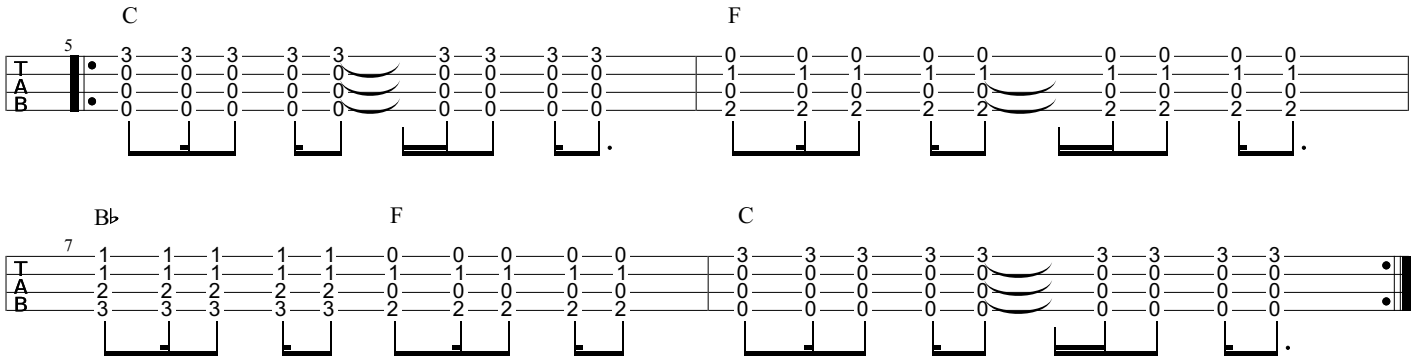

Verse

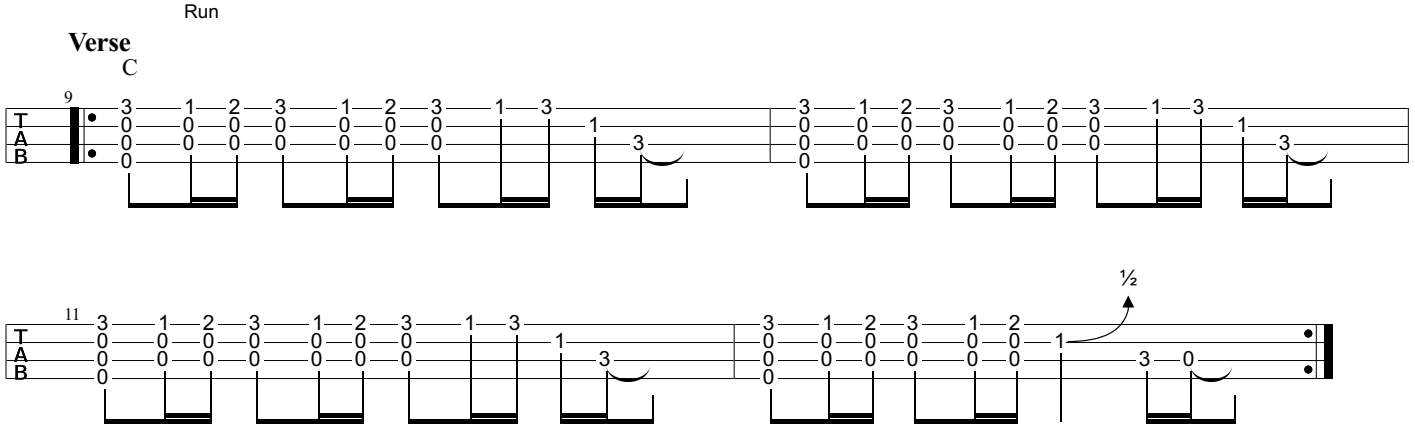

Copyright www.markrandlesome.co.uk
All Rights Reserved - International Copyright Secured